Removable Bollard Post Detail
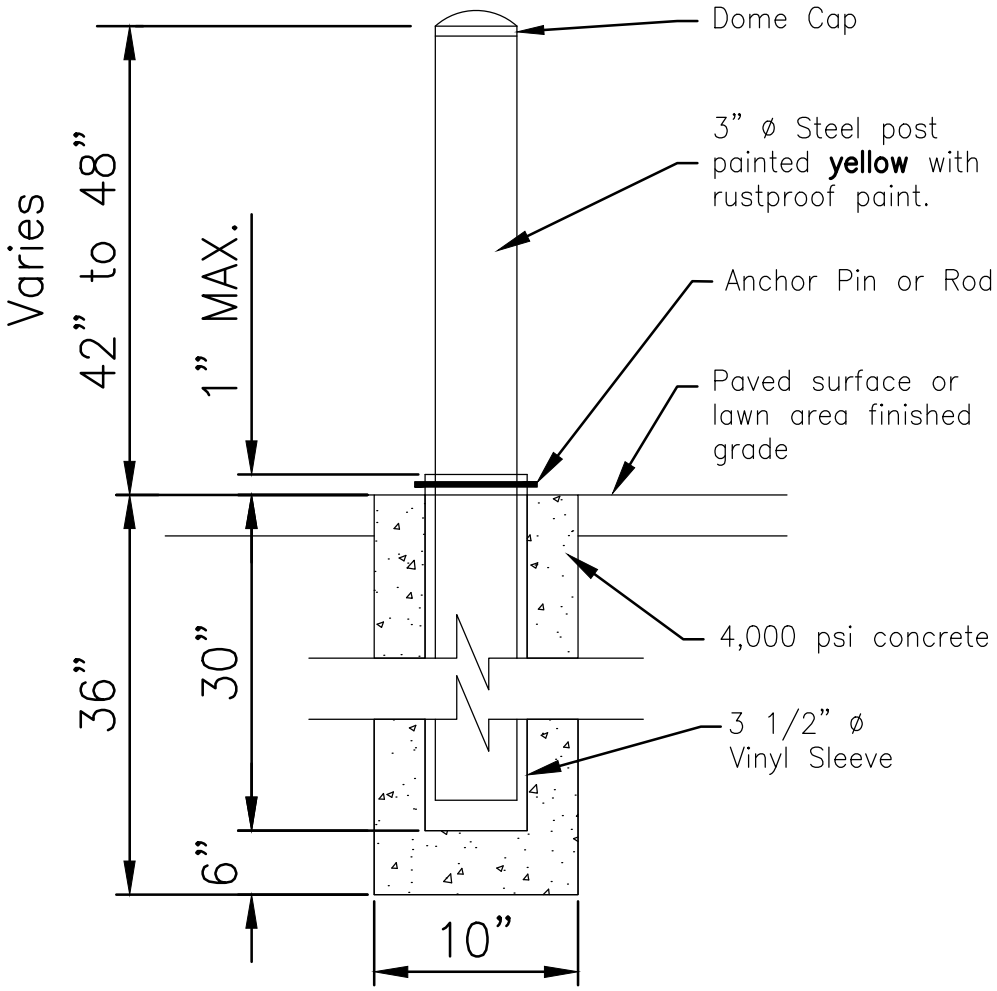
Not To Scale